THERMA-TRU® DOORS

Classic-Craft®

OPAQUE FIBERGLASS SINGLE DOOR w/ SIDELITE(S)

INSWING/OUTSWING "NON-IMPACT"

GENERAL NOTES

1. This product has been evaluated and is in compliance with the 8th Edition (2023) Florida Building Code (FBC) structural requirements excluding the "High Velocity Hurricane Zone" (HVHZ).
2. Product anchors shall be as listed and spaced as shown on details. Anchor embedment to base material shall be beyond wall dressing or stucco.
3. When used in areas requiring wind borne debris protection, this product is required to be protected with an impact resistant covering that complies with FBC Sections 1609.1.2 & R301.2.1.2 as follows: Wind Zones 1, 2 & 3: Glazed Sidelites only; Wind Zone 4: Entire System.
4. For 2x stud framing construction, anchoring of these units shall be the same as that shown for 2x buck masonry construction.
5. Site conditions that deviate from the details of this drawing require further engineering analysis by a licensed engineer or registered architect.

TABLE OF CONTENTS

SHEET #	DESCRIPTION
1	Typical Elevations, Design Pressures & General Notes
2	Door Panel Details
3	Sidelite Panel Details
4	Elevations
5	Horizontal & Vertical Cross Sections (2X Buck)
6	Horizontal & Vertical Cross Sections (1X Buck)
7	Horizontal & Vertical Cross Sections (Direct to Masonry)
8	Vertical Cross Sections (Thresholds)
9	Buck Anchoring
10	Frame Anchoring
11	Components
12	Bill of Materials

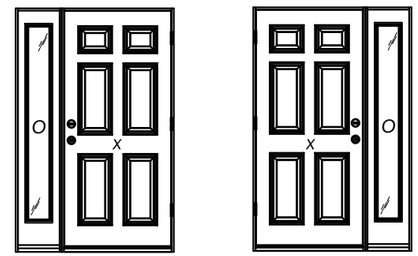

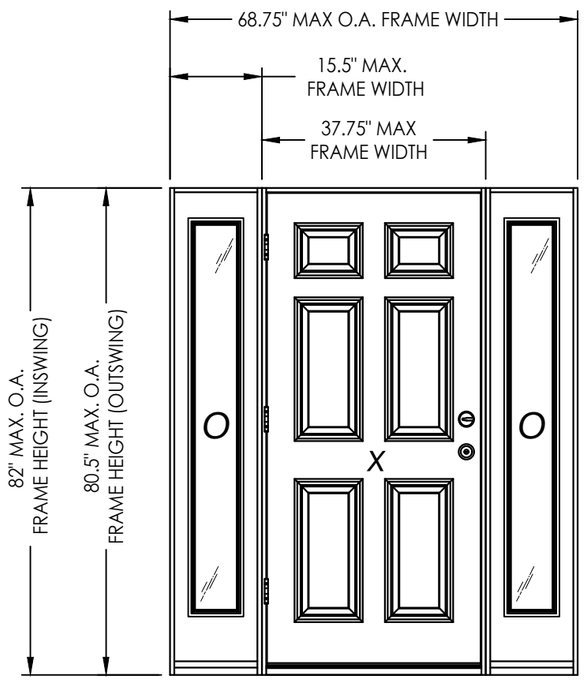

CONFIGURATION	DESIGN PRESSURE (PSF) INSWING		DESIGN PRESSURE (PSF) OUTSWING	
	POSITIVE	NEGATIVE	POSITIVE	NEGATIVE
OX, XO, OXO	+55.0	-55.0	+55.0	-55.0

L. F. SCHMIDT LICENSE No. 43409 STATE OF FLORIDA PROFESSIONAL ENGINEER

Digitally signed by Lyndon F Schmidt
Date: 2023.08.24 15:10:09 -04'00'

This item has been digitally signed and sealed by **L. F. Schmidt, P.E.** on the date adjacent to the seal.

Printed copies of this document are not considered signed and sealed and the signature must be verified on any electronic copies.

THIS PRODUCT APPROVAL IS VALID ONLY FOR THE STATE OF FLORIDA

Documents Prepared By:
Lyndon F. Schmidt
P.E. No. 43409

RW BUILDING CONSULTANTS, INC.
P.O. Box 230, Valrico, FL 33595
Phone No.: 813.659.9197
FBPE Registry No. 9813

PRODUCT: THERMA-TRU FIBERGLASS DOOR

PART OR ASSEMBLY: TYPICAL ELEVATION, DESIGN PRESSURES & GENERAL NOTES

REVISIONS

NO.	DATE		BY
2	8/22/23	UPDATE TO 8TH ED. (2023) FBC	LFS
1	8/05/20	UPDATE TO 7th ED (2020) FBC	LFS

DATE: 3/25/20
SCALE: N.T.S.
DWG. BY: RW
CHK. BY: LFS
DRAWING NO.: FL-23955.2
SHEET 1 OF 12

© 2020 R.W. BUILDING CONSULTANTS INC.

Z:\2023 FBC Drawings\Therma-Tru\FL-23955 R3\FL-23955.1-3.dwg

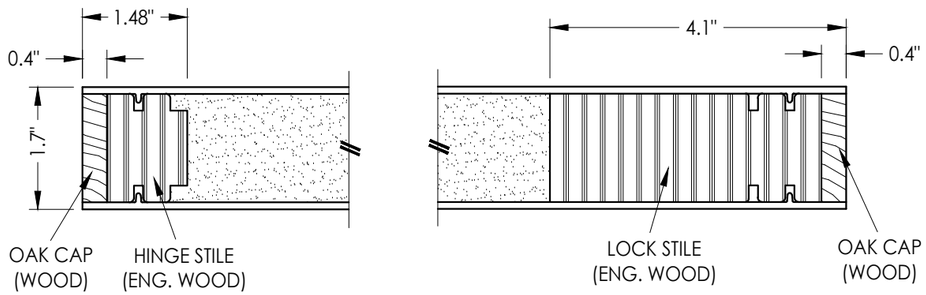

1/2 **HORIZONTAL CROSS SECTION**

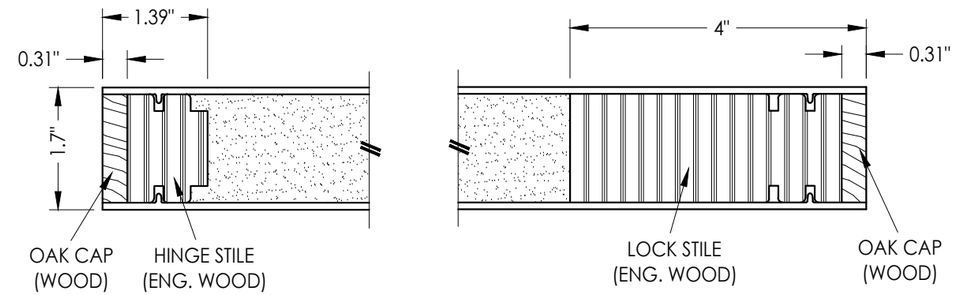

2/2 **HORIZONTAL CROSS SECTION**

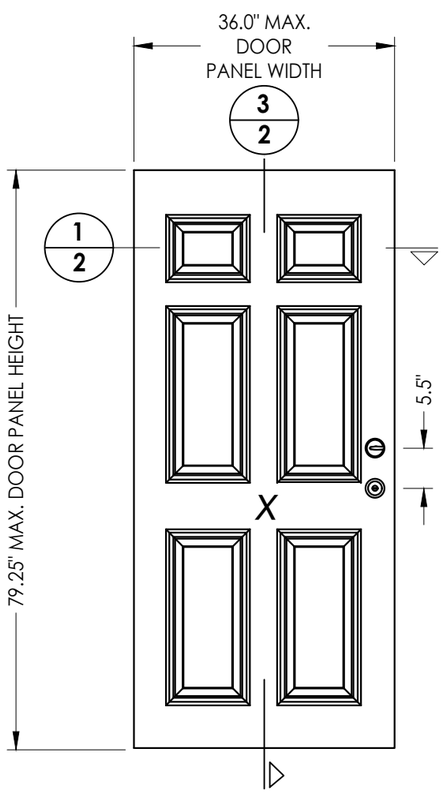

40 **DOOR PANEL**
BOOK

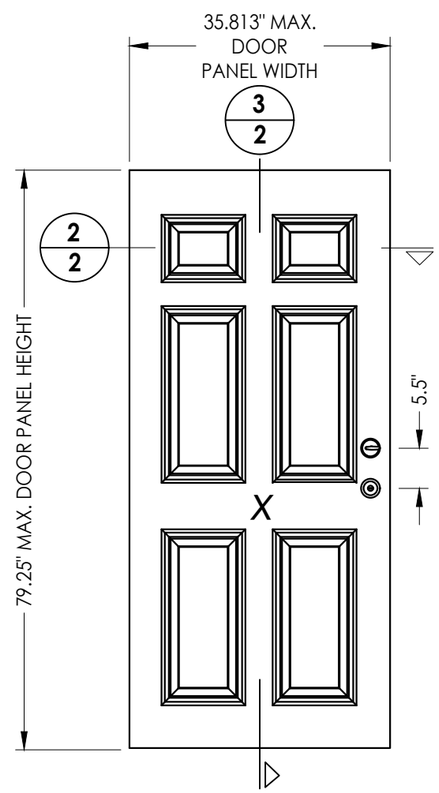

41 **DOOR PANEL**
Hybrid Door

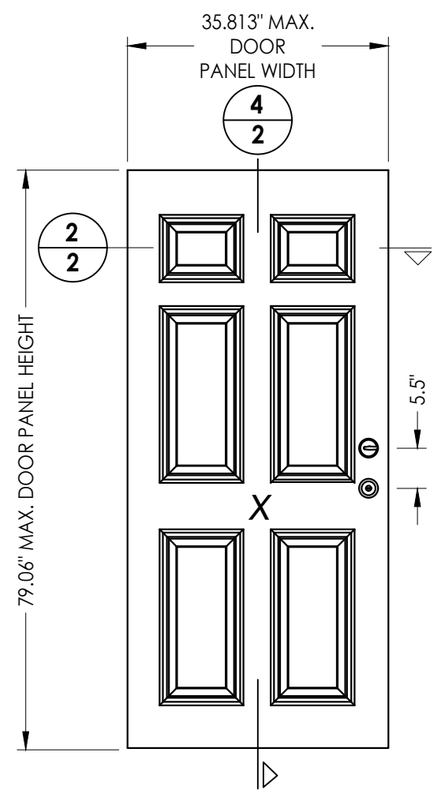

42 **DOOR PANEL**
U1 Door

"Classic-Craft" SERIES DOOR PANEL

FIBERGLASS DOOR SKIN: 0.095" MIN. THK.
FOAM CORE: POLYURETHANE FOAM (1.9 PCF MIN.)

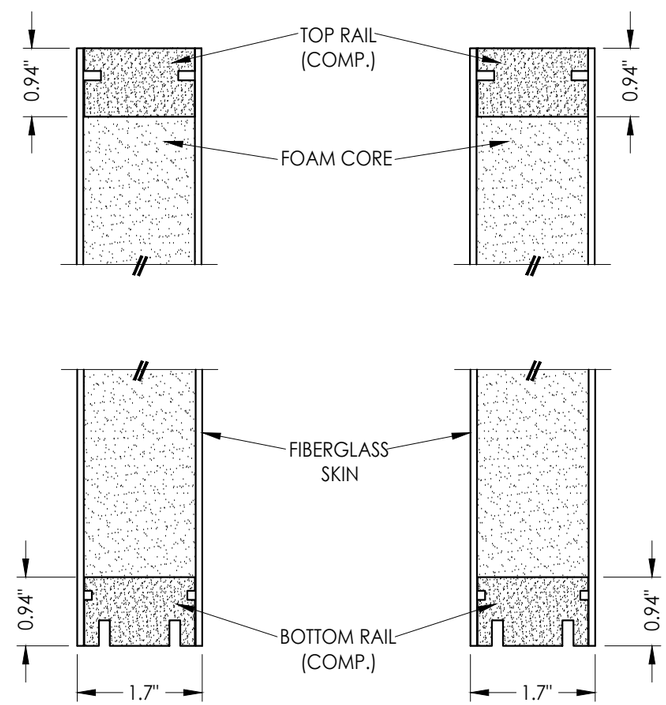

3/2 **VERTICAL CROSS SECTION**

4/2 **VERTICAL CROSS SECTION**

Documents Prepared By:
Lyndon F. Schmidt
P.E. No. 43409

RW BUILDING CONSULTANTS, INC.
P.O. Box 230, Valrico, FL 33595
Phone No.: 813.659.9197
FBPE Registry No. 9813

PRODUCT: THERMA-TRU FIBERGLASS DOOR

PART OR ASSEMBLY: DOOR PANEL DETAILS

NO.	DATE	REVISIONS	BY
2	8/22/23	UPDATE TO 8TH ED. (2023) FBC	LFS
1	8/05/20	UPDATE TO 7th ED (2020) FBC	LFS

DATE: 3/25/20
SCALE: N.T.S.
DWG. BY: RW
CHK. BY: LFS
DRAWING NO.: FL-23955.2
SHEET 2 OF 12

© 2020 R.W. Building Consultants Inc.

Z:\2023 FBC Drawings\Therma-Tru\FL-23955 R3\FL-23955.1-3.dwg

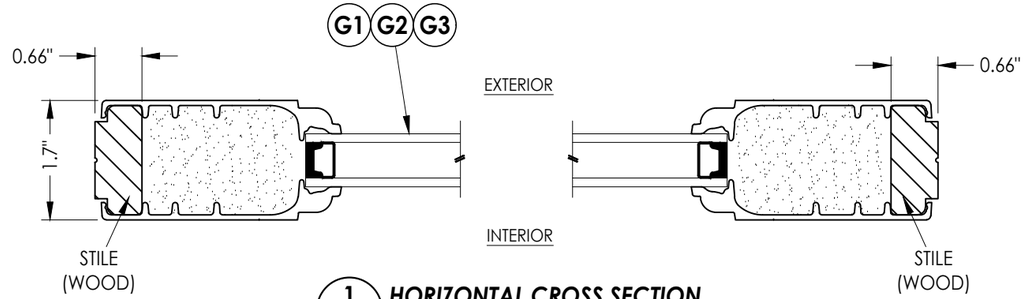

1/3 **HORIZONTAL CROSS SECTION**

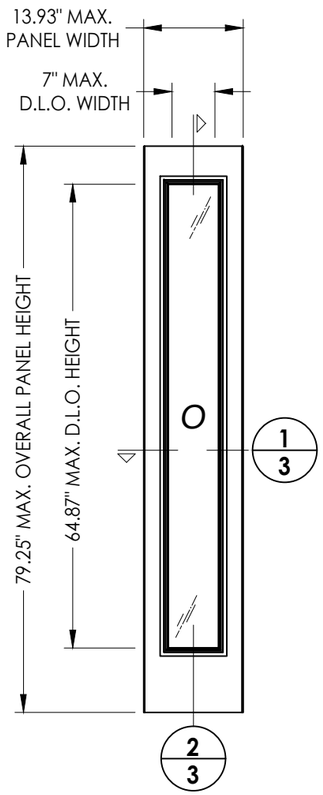

50 **SIDELITE PANEL**

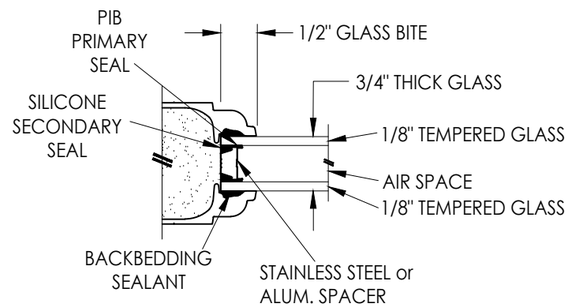

G1 **GLAZING DETAIL**
Flush Glazed

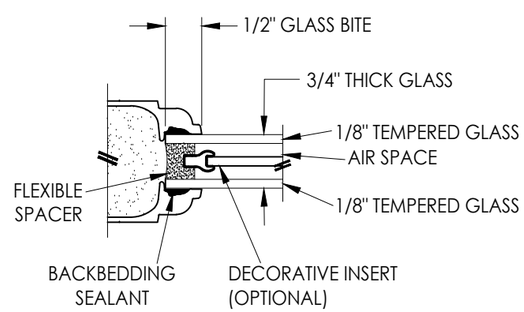

G2 **GLAZING DETAIL**
Flush Glazed
Decorative

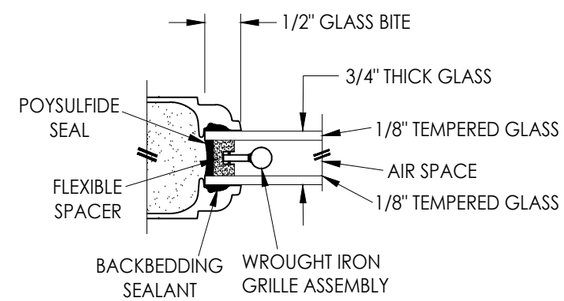

G3 **GLAZING DETAIL**
Flush Glazed
Wrought Iron

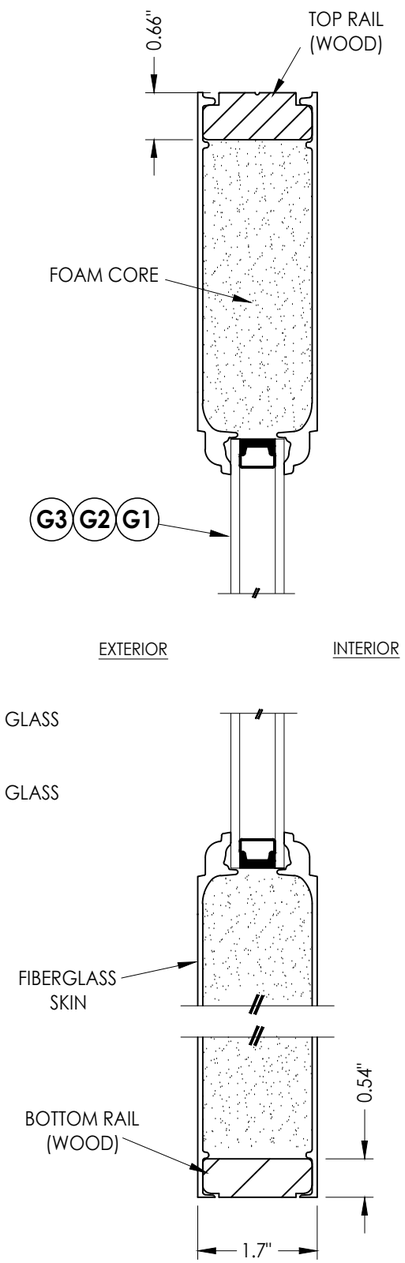

2/3 **VERTICAL CROSS SECTION**

SIDELITE PANEL

FIBERGLASS SKIN: 0.070" MIN. THK.
FOAM CORE: POLYURETHANE FOAM (1.9 PCF MIN.)

Documents Prepared By:
Lyndon F. Schmidt
P.E. No. 43409
RW BUILDING CONSULTANTS, INC.
P.O. Box 230, Valrico, FL 33595
Phone No.: 813.659.9197
FBPE Registry No. 9813

PRODUCT: THERMA-TRU FIBERGLASS DOOR

PART OR ASSEMBLY: SIDELITE PANEL DETAILS

NO.	DATE		BY
2	8/22/23	UPDATE TO 8TH ED. (2023) FBC	LFS
1	8/05/20	UPDATE TO 7th ED (2020) FBC	LFS

REVISIONS

DATE: 3/25/20
SCALE: N.T.S.
DWG. BY: RW
CHK. BY: LFS
DRAWING NO.: FL-23955.2
SHEET 3 OF 12

© 2020 R.W. Building Consultants Inc.

Z:\2023 FBC Drawings\Therma-Tru\FL-23955 R3\FL-23955.1-3.dwg

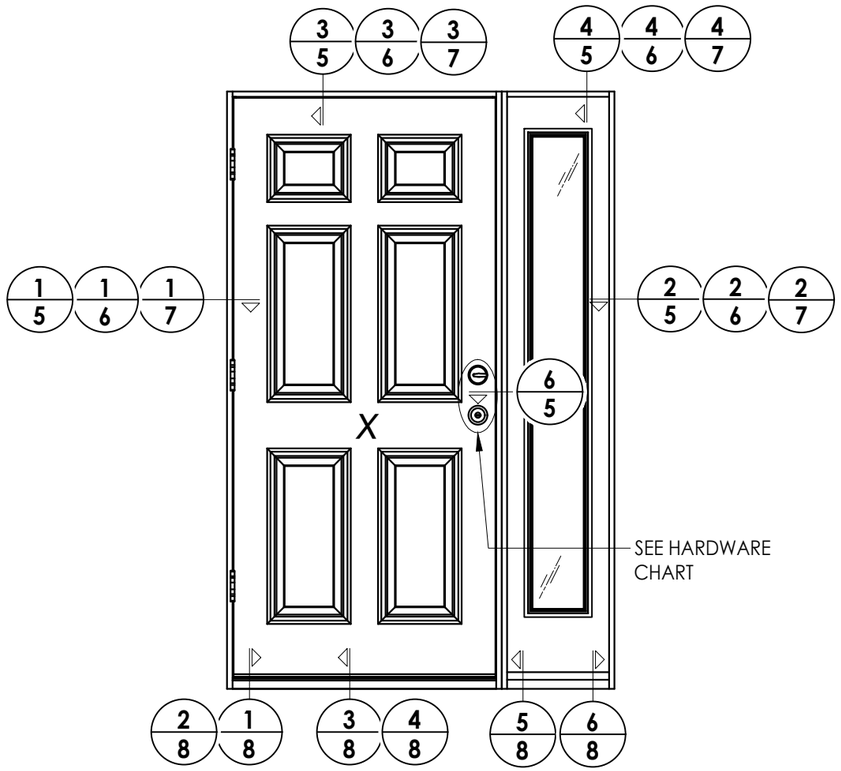

ELEVATION
XO

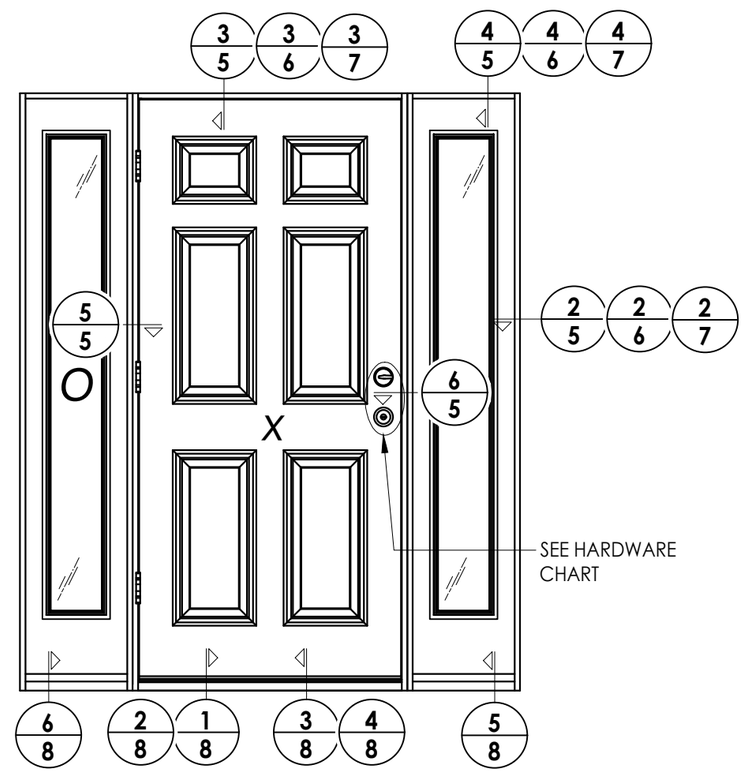

ELEVATION
OXO

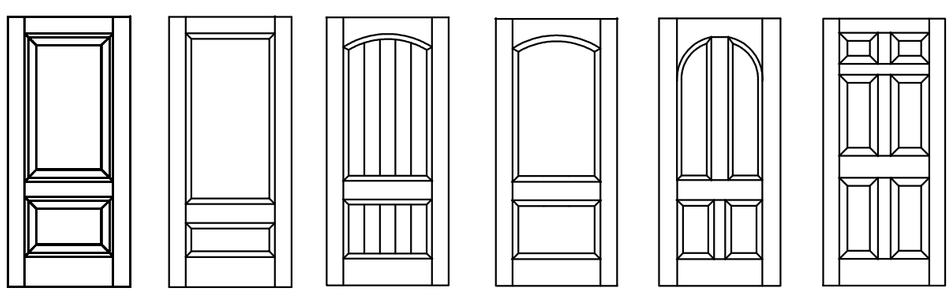

Classic-Craft Door Panel Options

Panel options shown are for illustration and are representative only
(similar opaque panel configurations are allowed)

HARDWARE TABLE	
MANUFACTURER	MODEL
KWIKSET	KNOB: SIGNATURE SERIES DEADBOLT: SIGNATURE SERIES (780)

Documents Prepared By:
Lyndon F. Schmidt
P.E. No. 43409

RW BUILDING CONSULTANTS, INC.
P.O. Box 230, Valrico, FL 33595
Phone No.: 813.659.9197
FBPE Registry No. 9813

PRODUCT: THERMA-TRU FIBERGLASS DOOR

PART OR ASSEMBLY: ELEVATIONS

REVISIONS

NO.	DATE	BY
2	8/22/23 UPDATE TO 8TH ED. (2023) FBC	LFS
1	8/05/20 UPDATE TO 7th ED (2020) FBC	LFS

DATE: 3/25/20
SCALE: N.T.S.
DWG. BY: RW
CHK. BY: LFS
DRAWING NO.: FL-23955.2
SHEET 4 OF 12

© 2020 R.W. BUILDING CONSULTANTS INC.

Z:\2023 FBC Drawings\Therma-Tru\FL-23955 R3\FL-23955.1-3.dwg

Notes:
1. Sidelite assembly screws located 7" from top and 14" from bottom & 2 more screws equally spaced between (4 screws total per side jamb).
2. Sidelite assembly screws located 4" from each end (2 screws along head jamb).

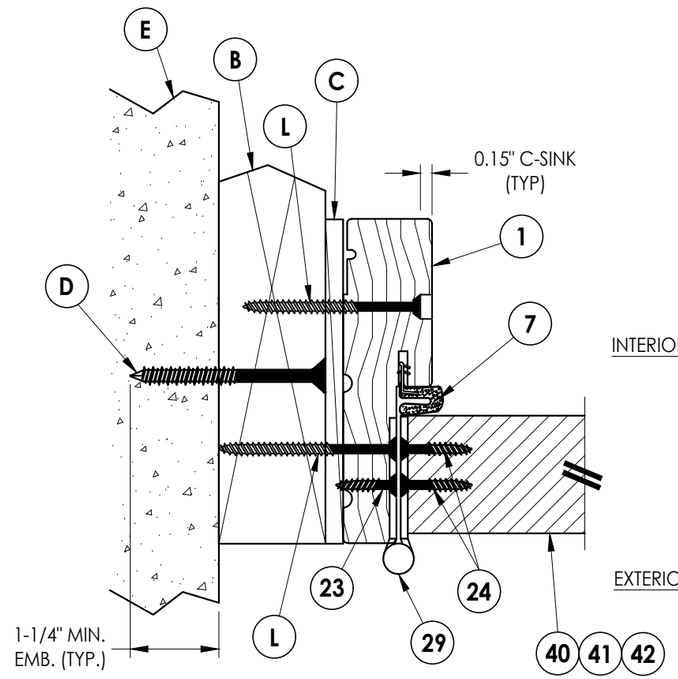

1/5 **HORIZONTAL CROSS SECTION**
Outswing shown (Inswing similar)

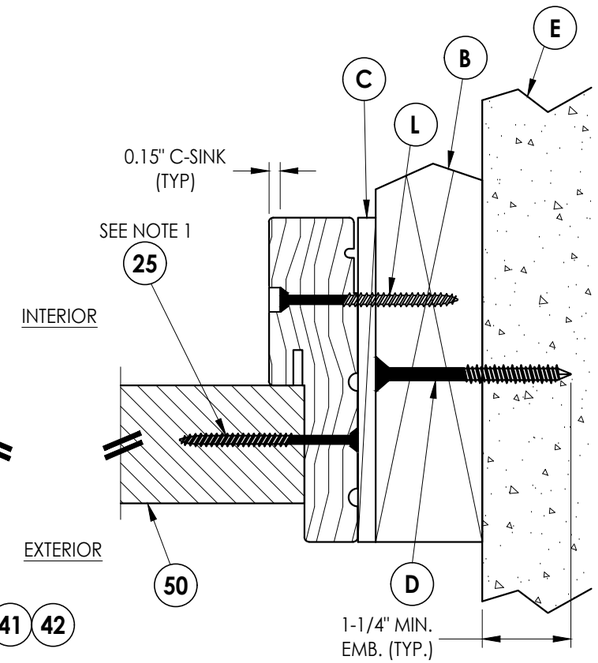

2/5 **HORIZONTAL CROSS SECTION**
Outswing shown (Inswing similar)

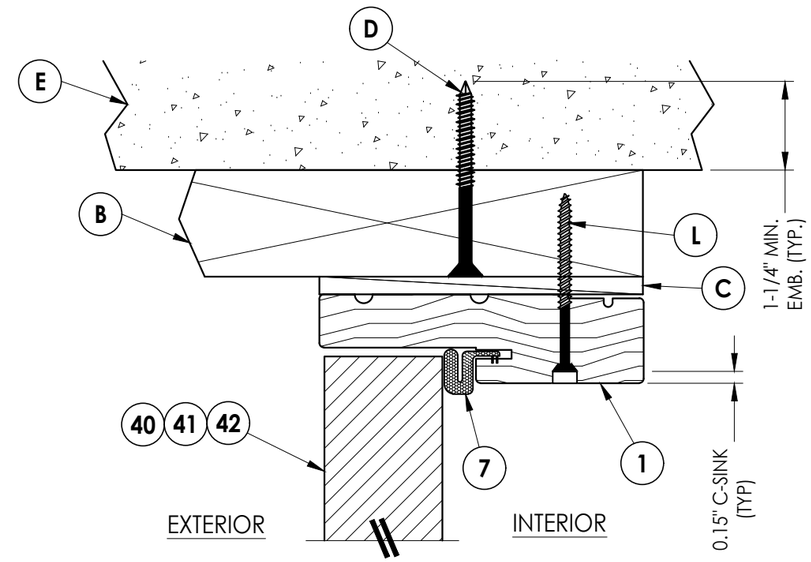

3/5 **VERTICAL CROSS SECTION**
Outswing shown (Inswing similar)

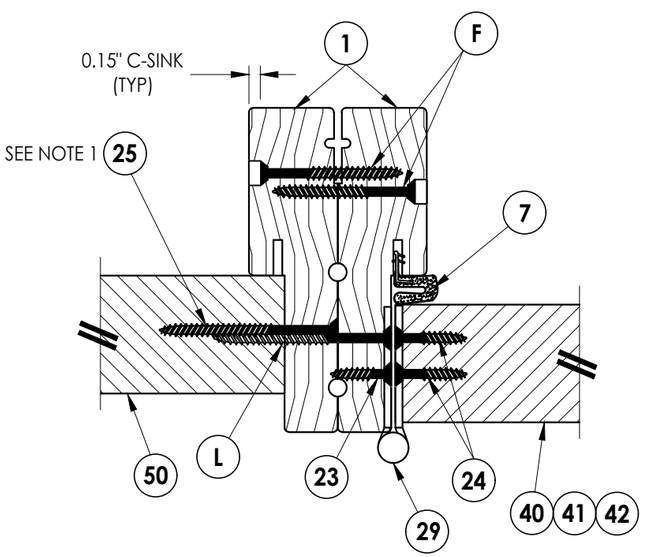

5/5 **HORIZONTAL CROSS SECTION**
Outswing shown (Inswing similar)

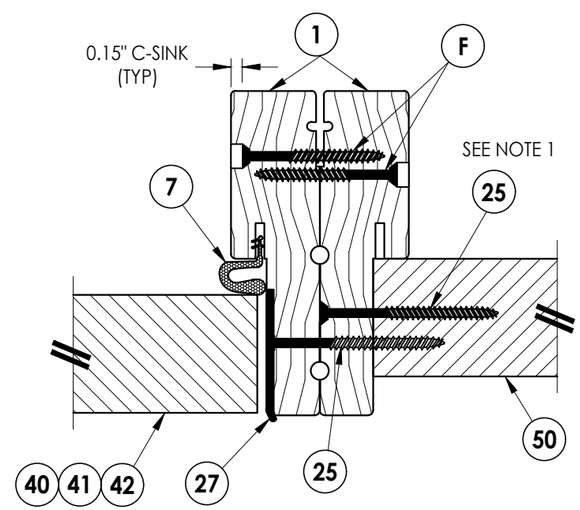

6/5 **HORIZONTAL CROSS SECTION**
Outswing shown (Inswing similar)

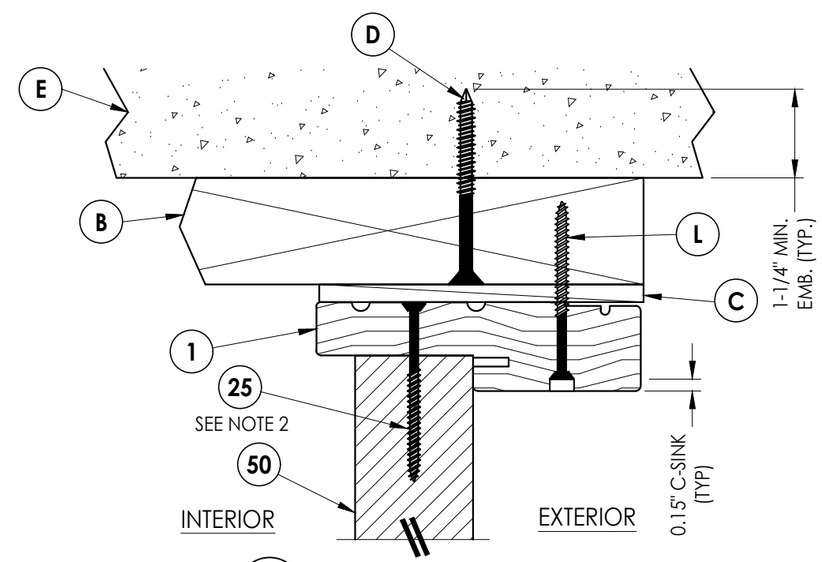

4/5 **VERTICAL CROSS SECTION**
Outswing shown (Inswing similar)

Documents Prepared By:
Lyndon F. Schmidt
P.E. No. 43409
RW BUILDING CONSULTANTS, INC.
P.O. Box 230, Valrico, FL 33595
Phone No.: 813.659.9197
FBPE Registry No. 9813

PRODUCT: THERMA-TRU FIBERGLASS DOOR

PART OR ASSEMBLY: HORIZONTAL & VERTICAL CROSS SECTIONS (2X BUCK)

REVISIONS

NO.	DATE		BY
2	8/22/23	UPDATE TO 8TH ED. (2023) FBC	LFS
1	8/05/20	UPDATE TO 7th ED (2020) FBC	LFS

DATE: 3/25/20
SCALE: N.T.S.
DWG. BY: RW
CHK. BY: LFS
DRAWING NO.: FL-23955.2
SHEET 5 OF 12

© 2012 R.W. BUILDING CONSULTANTS INC.

Z:\2023 FBC Drawings\Therma-Tru\FL-23955 R3\FL-23955.1-3.dwg

Notes:
1. Sidelite assembly screws located 7" from top and 14" from bottom & 2 more screws equally spaced between (4 screws total per side jamb).
2. Sidelite assembly screws located 4" from each end (2 screws along head jamb).

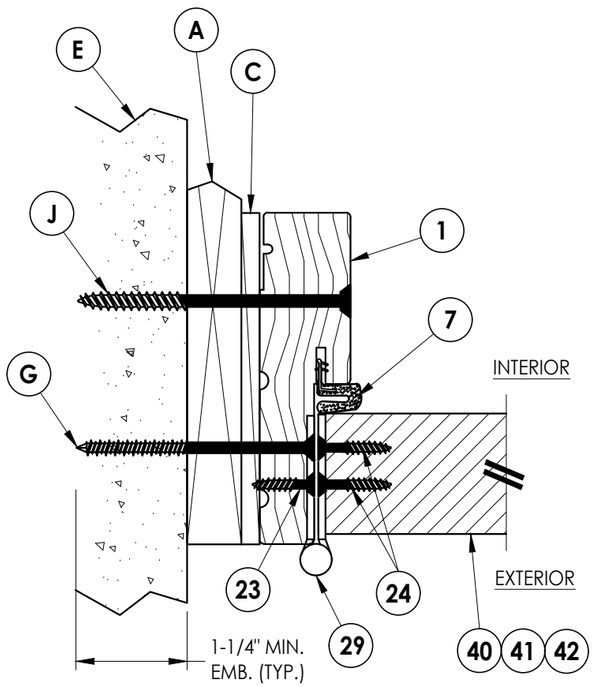

1/6 **HORIZONTAL CROSS SECTION**
Shown w/ 1X sub-buck
Outswing shown (Inswing similar)

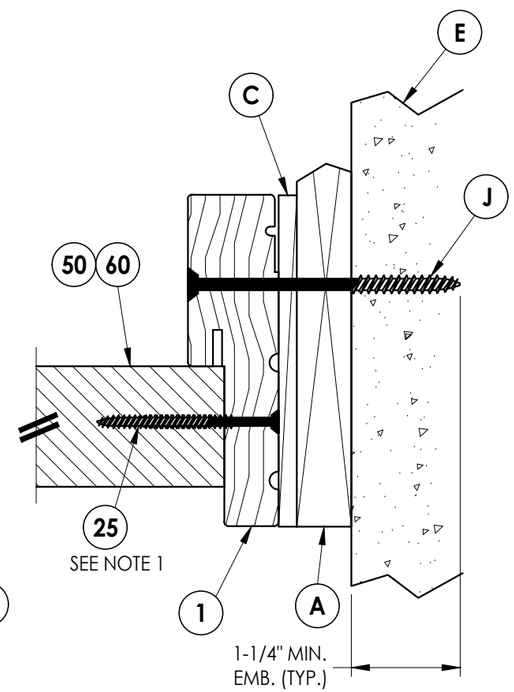

2/6 **HORIZONTAL CROSS SECTION**
Shown w/ 1X sub-buck
Outswing shown (Inswing similar)

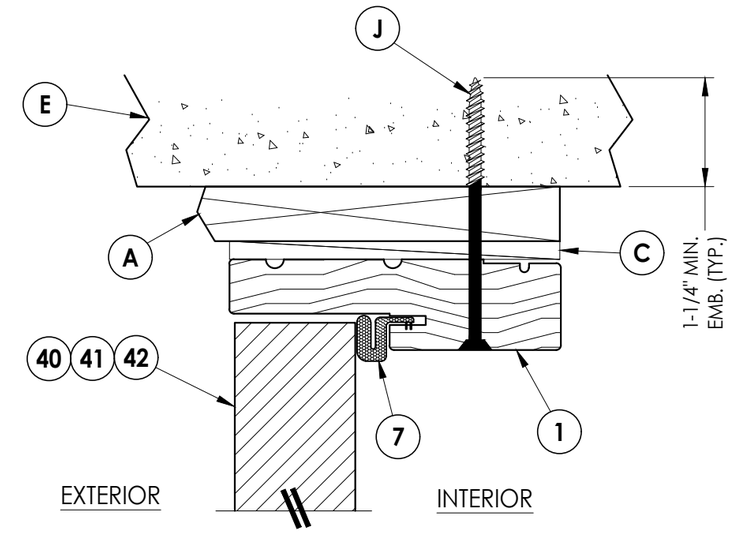

3/6 **VERTICAL CROSS SECTION**
Shown w/ 1X sub-buck
Outswing shown (Inswing similar)

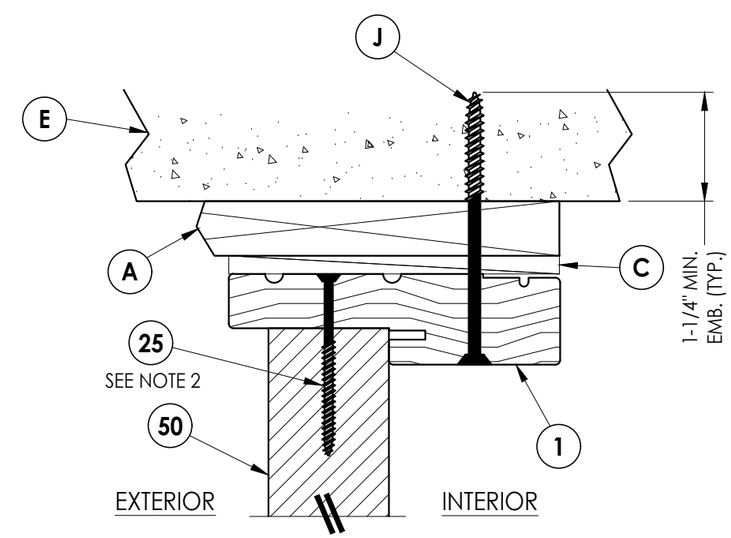

4/6 **VERTICAL CROSS SECTION**
Shown w/ 1X sub-buck
Outswing shown (Inswing similar)

Documents Prepared By:
Lyndon F. Schmidt
P.E. No. 43409
RW BUILDING CONSULTANTS, INC.
P.O. Box 230, Valrico, FL 33595
Phone No.: 813.659.9197
FBPE Registry No. 9813

PRODUCT: THERMA-TRU FIBERGLASS DOOR

PART OR ASSEMBLY: HORIZONTAL & VERTICAL CROSS SECTIONS (1X BUCK)

NO.	DATE	REVISIONS	BY
2	8/22/23	UPDATE TO 8TH ED. (2023) FBC	LFS
1	8/05/20	UPDATE TO 7th ED (2020) FBC	LFS

DATE: 3/25/20
SCALE: N.T.S.
DWG. BY: RW
CHK. BY: LFS
DRAWING NO.: FL-23955.2
SHEET 6 OF 12

© 2020 R.W. BUILDING CONSULTANTS INC.

Z:\2023 FBC Drawings\Therma-Tru\FL-23955 R3\FL-23955.1-3.dwg

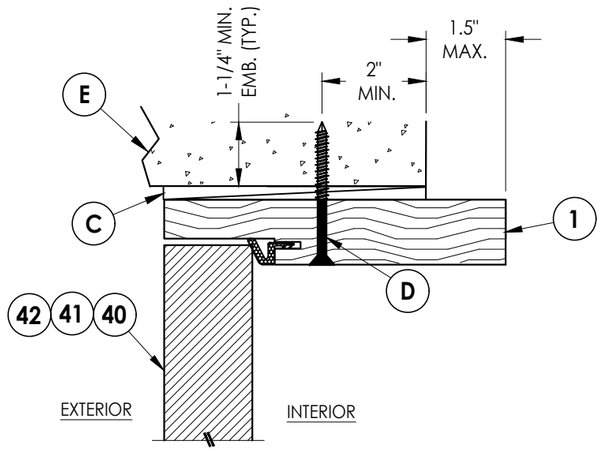

2/7 HORIZONTAL CROSS SECTION
Shown Direct to Masonry
Outswing only w/ 6-9/16" jamb

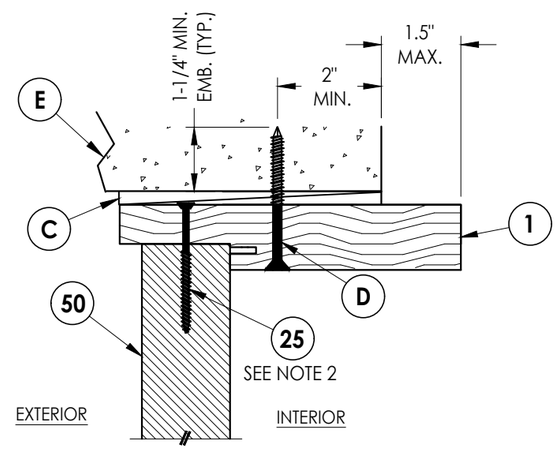

3/7 VERTICAL CROSS SECTION
Shown Direct to Masonry
Outswing only w/ 6-9/16" jamb

Notes:
1. Sidelite assembly screws located 7" from top and 14" from bottom & 2 more screws equally spaced between (4 screws total per side jamb).
2. Sidelite assembly screws located 4" from each end (2 screws along head jamb).

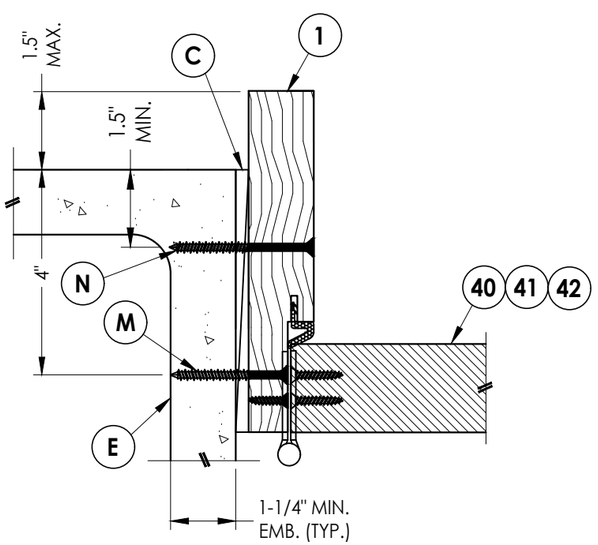

1/7 HORIZONTAL CROSS SECTION
Shown Direct to Masonry
Outswing only w/ 6-9/16" jamb

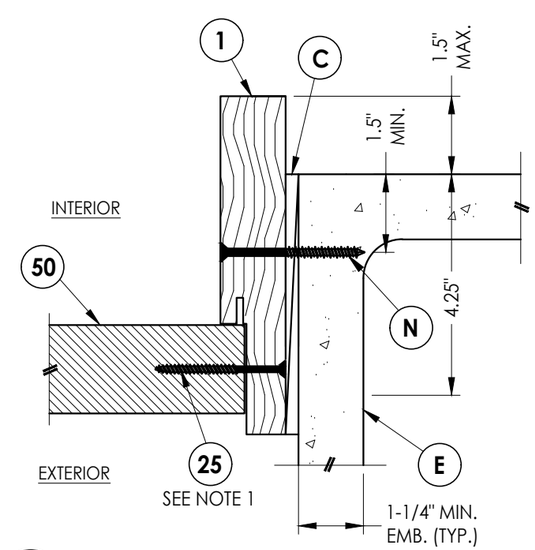

4/7 VERTICAL CROSS SECTION
Shown Direct to Masonry
Outswing only w/ 6-9/16" jamb

Documents Prepared By:
Lyndon F. Schmidt
P.E. No. 43409

RW BUILDING CONSULTANTS, INC.
P.O. Box 230, Valrico, FL 33595
Phone No.: 813.659.9197
FBPE Registry No. 9813

PRODUCT: THERMA-TRU FIBERGLASS DOOR

PART OR ASSEMBLY: HORIZONTAL & VERTICAL SECTIONS (DIRECT TO MASONRY)

NO.	DATE	REVISIONS	BY
2	8/22/23	UPDATE TO 8TH ED. (2023) FBC	LFS
1	8/05/20	UPDATE TO 7th ED (2020) FBC	LFS

DATE: 3/24/20
SCALE: N.T.S.
DWG. BY: RW
CHK. BY: LFS
DRAWING NO.: FL-23955.2
SHEET 7 OF 12

© 2020 R.W. BUILDING CONSULTANTS INC.

Z:\2023 FBC Drawings\Therma-Tru\FL-23955 R3\FL-23955.1-3.dwg

Notes:
1. Sill Item #'s 13, 16, 17, 19 & 20 are attached to jambs w/ (3) #8 X 2-1/2" pfh screws at each end.
   Sill Item #'s 14 & 15 are attached to jambs w/ (2) #8 X 2-1/2" pfh screws at each end.
   Sill Item # 18 is attached to jambs utilizing (4) #10 X 1-1/2" pph screws at each end.
2. Sidelite assembly screws located 4" from each end (2 screws total along sill).

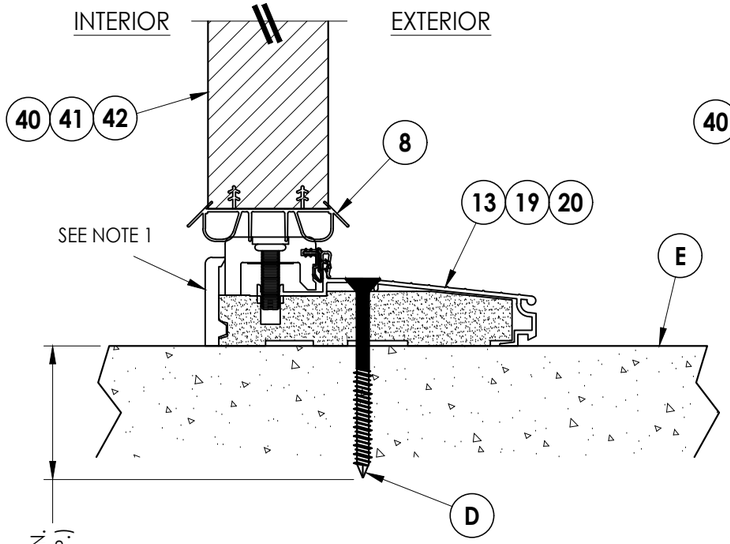

1/8 **VERTICAL CROSS SECTION**
Inswing Sill

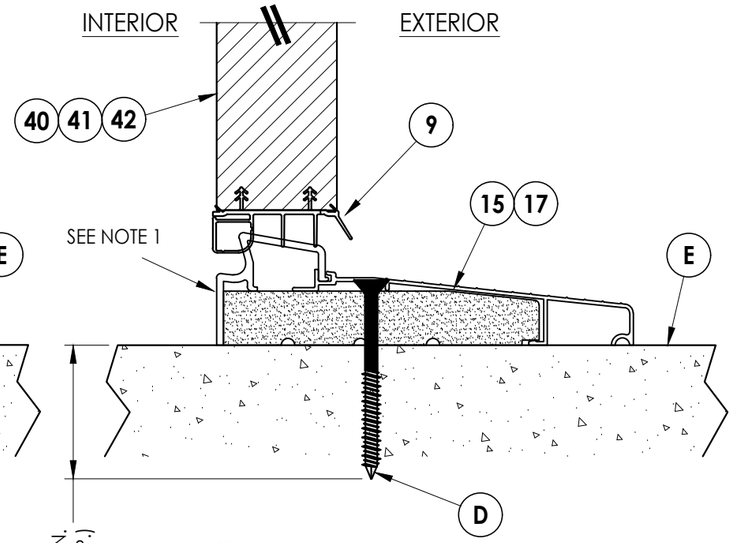

2/8 **VERTICAL CROSS SECTION**
Inswing Sill

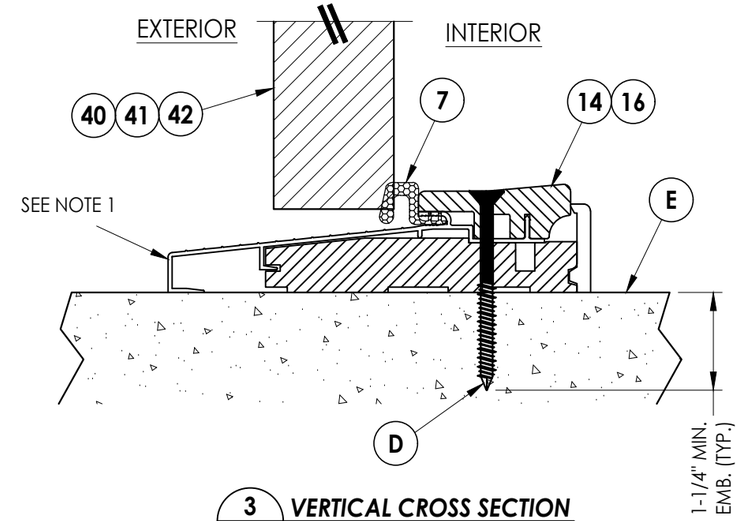

3/8 **VERTICAL CROSS SECTION**
Outswing Sill

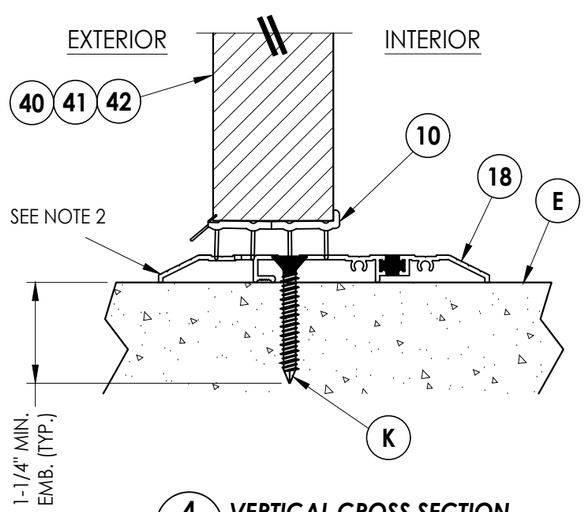

4/8 **VERTICAL CROSS SECTION**
Public Access Sill

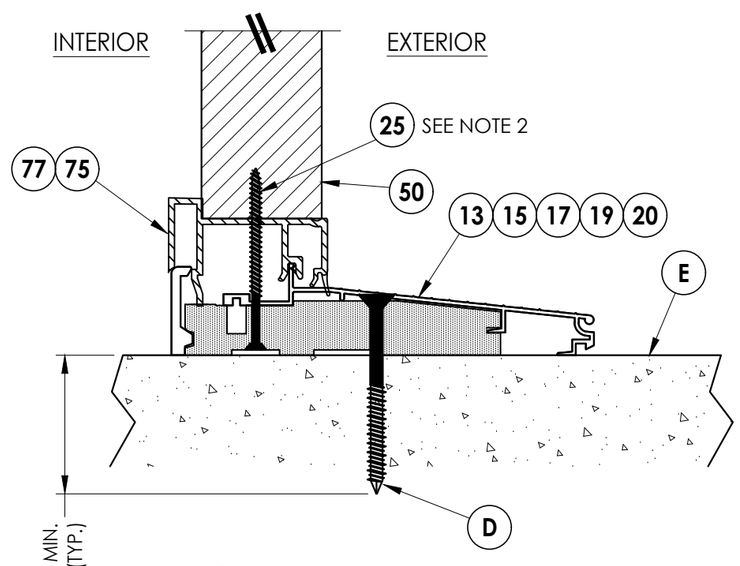

5/8 **VERTICAL CROSS SECTION**
Inswing Sill

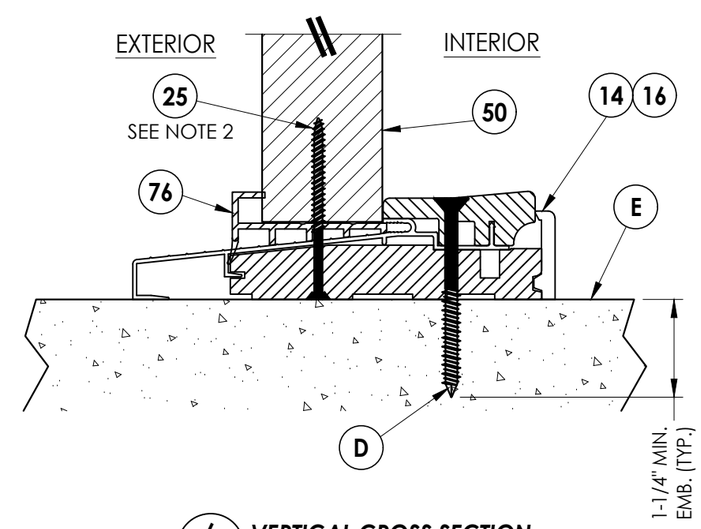

6/8 **VERTICAL CROSS SECTION**
Outswing Sill

Documents Prepared By:
Lyndon F. Schmidt
P.E. No. 43409

RW BUILDING CONSULTANTS, INC.
P.O. Box 230, Valrico, FL 33595
Phone No.: 813.659.9197
FBPE Registry No. 9813

PRODUCT: THERMA–TRU FIBERGLASS DOOR

PART OR ASSEMBLY: VERTICAL CROSS SECTIONS (THRESHOLDS)

REVISIONS

NO.	DATE	BY
2	8/22/23	UPDATE TO 8TH ED. (2023) FBC	LFS
1	8/05/20	UPDATE TO 7th ED (2020) FBC	LFS

DATE: 3/25/20
SCALE: N.T.S.
DWG. BY: RW
CHK. BY: LFS
DRAWING NO.: FL–23955.2
SHEET 8 OF 12

© 2020 R.W. BUILDING CONSULTANTS INC.

Z:\2023 FBC Drawings\Therma-Tru\FL-23955 R3\FL-23955.1-3.dwg

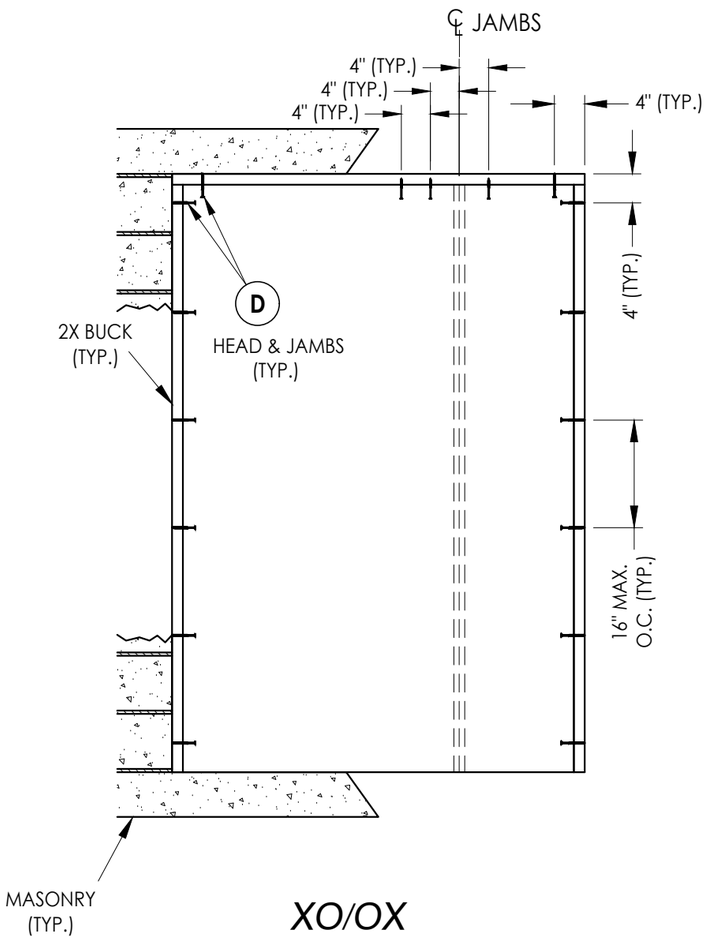

XO/OX

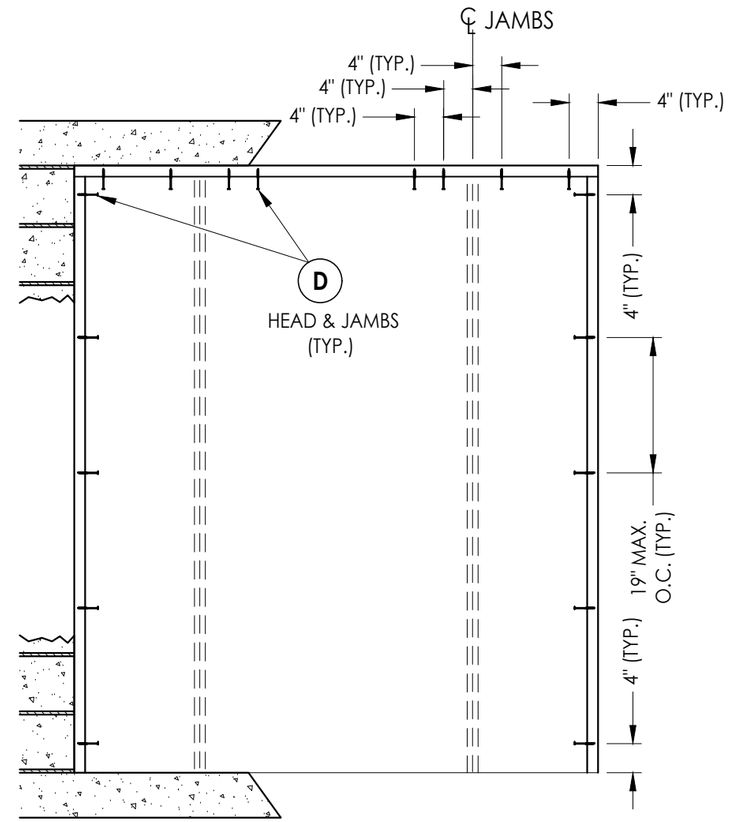

OXO

2X BUCK ANCHORING

Z:\2023 FBC Drawings\Therma-Tru\FL-23955 R3\FL-23955.1-3.dwg

Documents Prepared By:
Lyndon F. Schmidt
P.E. No. 43409

RW BUILDING CONSULTANTS, INC.
P.O. Box 230, Valrico, FL 33595
Phone No.: 813.659.9197
FBPE Registry No. 9813

PRODUCT: THERMA-TRU FIBERGLASS DOOR

PART OR ASSEMBLY: BUCK ANCHORING

NO.	DATE	REVISIONS	BY
2	8/22/23	UPDATE TO 8TH ED. (2023) FBC	LFS
1	8/05/20	UPDATE TO 7th ED (2020) FBC	LFS

DATE: 3/25/20
SCALE: N.T.S.
DWG. BY: RW
CHK. BY: LFS
DRAWING NO.: FL-23955.2
SHEET 9 OF 12

© 2020 R.W. Building Consultants Inc.

*NOTE: FRAME CORNERS @ HEAD ATTACHED TOGETHER w/ (3) #8 X 2-1/2" PFH WS (TYP.)

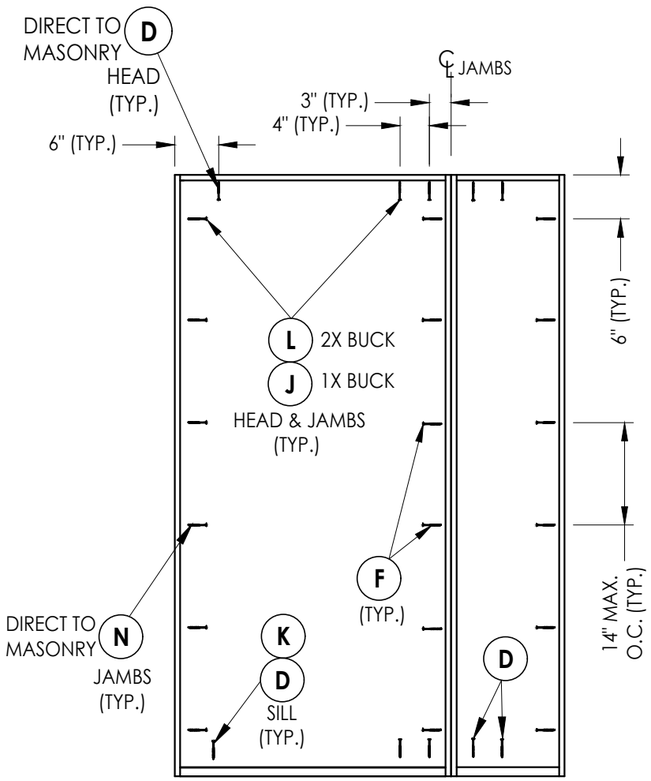

XO/OX

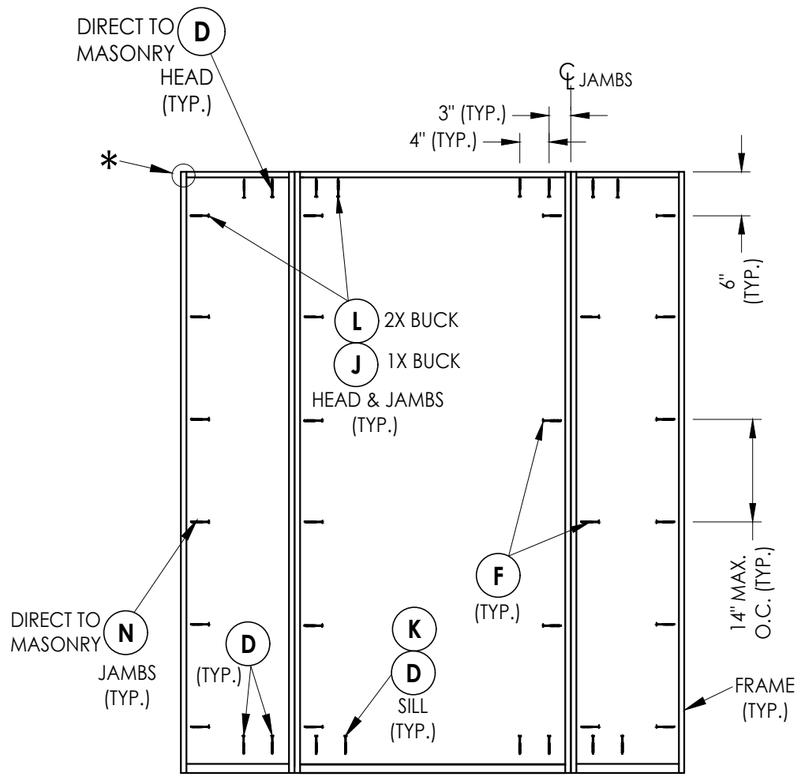

OXO

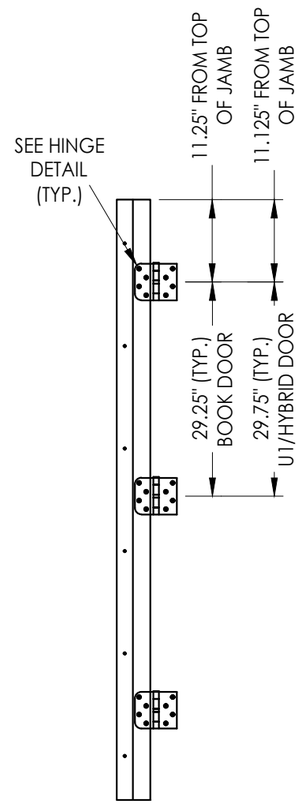

HINGE JAMB

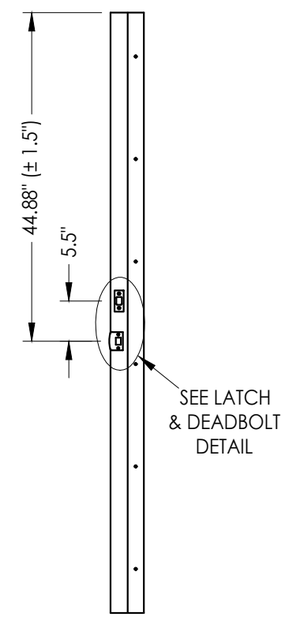

STRIKE JAMB
Latch & Deadbolt

FRAME ANCHORING

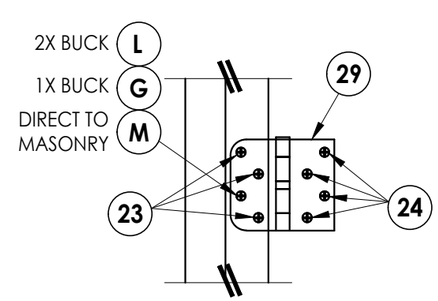

HINGE DETAIL

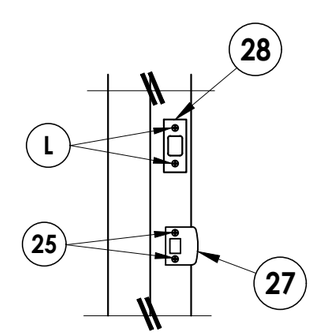

LATCH & DEADBOLT DETAIL

Documents Prepared By:
Lyndon F. Schmidt
P.E. No. 43409

RW BUILDING CONSULTANTS, INC.
P.O. Box 230, Valrico, FL 33595
Phone No.: 813.659.9197
FBPE Registry No. 9813

PRODUCT: THERMA-TRU FIBERGLASS DOOR

PART OR ASSEMBLY: FRAME ANCHORING

NO.	DATE	REVISIONS	BY
2	8/22/23	UPDATE TO 8TH ED. (2023) FBC	LFS
1	8/05/20	UPDATE TO 7th ED (2020) FBC	LFS

DATE: 3/25/20
SCALE: N.T.S.
DWG. BY: RW
CHK. BY: LFS
DRAWING NO.: FL-23955.2
SHEET 10 OF 12

© 2020 R.W. BUILDING CONSULTANTS INC.

Z:\2023 FBC Drawings\Therma-Tru\FL-23955 R3\FL-23955.1-3.dwg

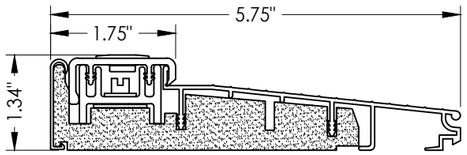

13 ***INSWING THRESHOLD***
Adjustable

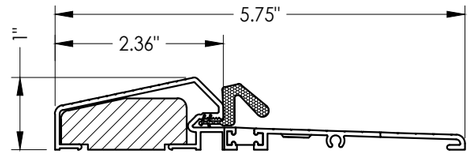

14 ***OUTSWING THRESHOLD***

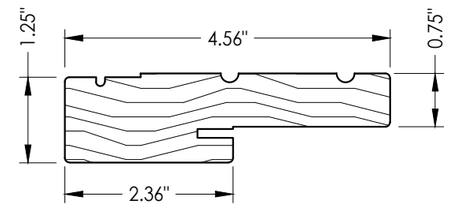

1 ***WOOD JAMB***

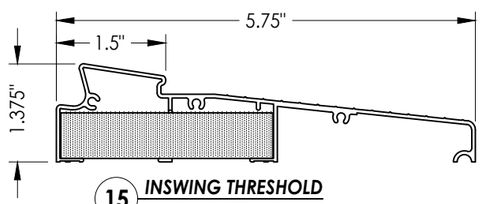

15 ***INSWING THRESHOLD***
Moderate Climate

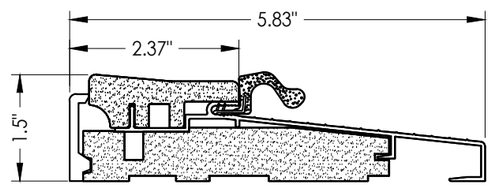

16 ***OUTSWING THRESHOLD***

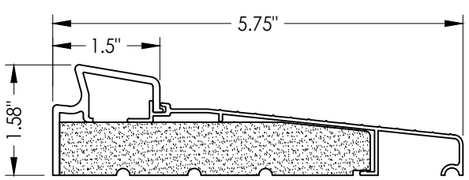

17 ***INSWING THRESHOLD***
Basic Fixed

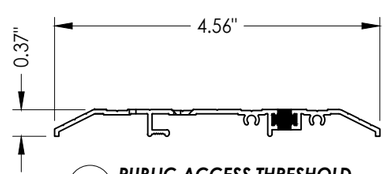

18 ***PUBLIC ACCESS THRESHOLD***

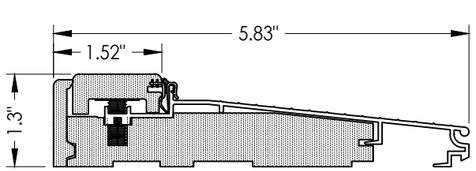

19 ***INSWING THRESHOLD***
Adjustable

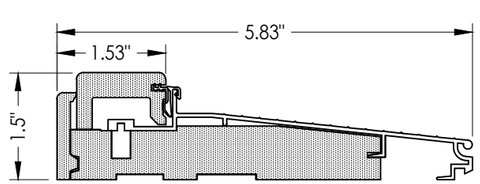

20 ***INSWING THRESHOLD***
Adjustable

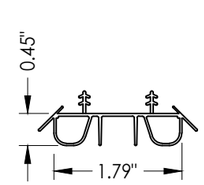

8 ***SWEEP***

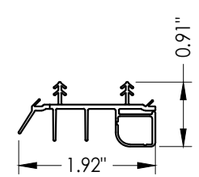

9 ***SWEEP***

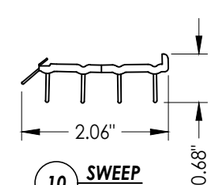

10 ***SWEEP***

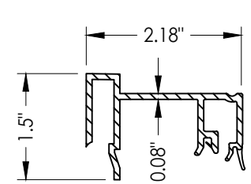

75 ***SIDELITE SPACER***
Inswing

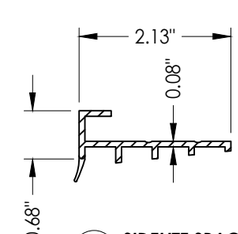

76 ***SIDELITE SPACER***
Outswing

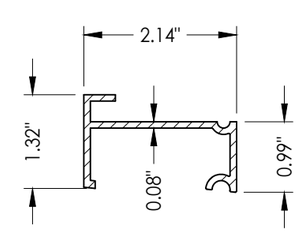

77 ***INSWING SIDELITE***
Adapter
Moderate Climate Sill

Documents Prepared By:
Lyndon F. Schmidt
P.E. No. 43409

RW BUILDING CONSULTANTS, INC.
P.O. Box 230, Valrico, FL 33595
Phone No.: 813.659.9197
FBPE Registry No. 9813

PRODUCT: *THERMA-TRU FIBERGLASS DOOR*

PART OR ASSEMBLY: *COMPONENTS*

REVISIONS

NO.	DATE	BY
2	8/22/23 UPDATE TO 8TH ED. (2023) FBC	LFS
1	8/05/20 UPDATE TO 7th ED (2020) FBC	LFS

DATE: 3/25/20
SCALE: N.T.S.
DWG. BY: RW
CHK. BY: LFS
DRAWING NO.: FL-23955.2
SHEET 11 OF 12

© 2020 R.W. Building Consultants Inc.

Z:\2023 FBC Drawings\Therma-Tru\FL-23955 R3\FL-23955.1-3.dwg

BILL OF MATERIALS

ITEM #	DESCRIPTION	MATERIAL
A	1X BUCK (SG >= 0.42)	WOOD
B	2X BUCK (SG >= 0.42)	WOOD
C	1/4" MAX. SHIM SPACE	-
D	1/4" X 2-3/4" PFH DeWALT OR ITW CONCRETE SCREW	STEEL
E	MASONRY - 3,000 PSI MIN. CONCRETE CONFORMING TO ACI 301 OR HOLLOW BLOCK CONFORMING TO ASTM C90	CONCRETE
F	#10 X 2" PFH WOOD SCREW	STEEL
G	3/16" X 3-1/4" PFH ITW CONCRETE SCREW	STEEL
J	1/4" X 3-3/4" PFH DeWALT OR ITW CONCRETE SCREW	STEEL
K	1/4" X 1-3/4" PFH DeWALT OR ITW CONCRETE SCREW	STEEL
L	#10 X 2-1/2" PFH WOOD SCREW (1.15" MIN. EMBEDMENT)	STEEL
M	3/16" X 2-1/4" PFH ITW CONCRETE SCREW	STEEL
1	JAMB (FINGER JOINT PINE)	WOOD
7	WEATHERSTRIP	FOAM
8	SWEEP	VINYL
9	SWEEP (USE w/ MODERATE CLIMATE THRESHOLD)	VINYL
10	SWEEP (USE w/ PUBLIC ACCESS THRESHOLD)	VINYL
13	INSWING THRESHOLD	ALUM/COMP
14	OUTSWING THRESHOLD	ALUM/COMP
15	INSWING THRESHOLD	ALUM/COMP
16	OUTSWING THRESHOLD	ALUM/COMP
17	INSWING THRESHOLD	ALUM/COMP
18	PUBLIC ACCESS THRESHOLD	ALUM
19	INSWING THRESHOLD	ALUM/COMP
20	INSWING THRESHOLD	ALUM/COMP
23	#10 X 3/4" PFH WOOD SCREW	STEEL
24	#10 X 1" PFH WOOD SCREW	STEEL
25	#8 X 2-1/2" PFH WOOD SCREW	STEEL
27	LATCH STRIKE PLATE	STEEL
28	DEADBOLT STRIKE PLATE	STEEL
29	4" X 4" HINGE	STEEL
40	DOOR PANEL (BOOK DOOR)	-
41	DOOR PANEL (HYBRID DOOR)	-
42	DOOR PANEL (U1 DOOR)	-
50	14" SIDELITE PANEL	-
75	SIDELITE SPACER (INSWING)	PVC
76	SIDELITE SPACER (OUTSWING)	PVC
77	SIDELITE SPACER (INSWING) - Moderate Climate Sill	PVC

CONCRETE ANCHOR NOTES:

1. *Concrete anchor locations at the corners may be adjusted to maintain the min. edge distance to mortar joints.*
2. *Concrete anchor locations noted as "MAX. ON CENTER" must be adjusted to maintain the min. edge distance to mortar joints, additional concrete anchors may be required to ensure the "MAX. ON CENTER" dimension are not exceeded.*
3. *Concrete anchor table:*

ANCHOR TYPE	ANCHOR SIZE	MIN. EMBEDMENT	MIN. CLEARANCE TO MASONRY EDGE	MIN. CLEARANCE TO ADJACENT ANCHOR
ITW TAPCON®	1/4"	1-1/4"	2"	4"
DeWALT ULTRACON+®	1/4"	1-1/4"	1"	4"
ITW TAPCON®	3/16"	1-1/4"	AS SHOWN	1-1/2"

WOOD SCREW INSTALLATION NOTES:

1. *Maintain a minimum 5/8" edge distance, 1" end distance, & 1" o.c. spacing of wood screws to prevent the splitting of wood.*

Documents Prepared By:
Lyndon F. Schmidt
P.E. No. 43409
R.W. BUILDING CONSULTANTS, INC.
P.O. Box 230, Valrico, FL 33595
Phone No.: 813.659.9197
FBPE Registry No. 9813

PRODUCT: THERMA-TRU FIBERGLASS DOOR

PART OR ASSEMBLY: BILL OF MATERIALS

NO.	DATE		BY
2	8/22/23	UPDATE TO 8TH ED. (2023) FBC	LFS
1	8/05/20	UPDATE TO 7th ED (2020) FBC	LFS

REVISIONS

DATE: 3/25/20
SCALE: N.T.S.
DWG. BY: RW
CHK. BY: LFS
DRAWING NO.: FL-23955.2
SHEET 12 OF 12

© 2020 R.W. BUILDING CONSULTANTS INC.

Z:\2023 FBC Drawings\Therma-Tru\FL-23955 R3\FL-23955.1-3.dwg